COPYRIGHT © 2014 ATWELL. NO REPRODUCTION SHALL BE MADE WITHOUT THE PRIOR WRITTEN CONSENT OF ATWELL

FINAL PLAT OF ALBANY VILLAGE

A PORTION OF THE WEST HALF OF THE NORTHEAST QUARTER OF SECTION 23, TOWNSHIP 1 NORTH, RANGE 6 EAST, OF THE GILA AND SALT RIVER MERIDIAN, MARICOPA COUNTY, ARIZONA

DEDICATION

STATE OF ARIZONA)
) SS.
COUNTY OF MARICOPA)

KNOW ALL MEN BY THESE PRESENTS:

THAT WILLIAM LYON HOMES, INC., A CALIFORNIA CORPORATION, AS OWNER, DOES HEREBY PUBLISH THIS FINAL PLAT FOR ALBANY VILLAGE, LOCATED IN NORTHEAST QUARTER OF SECTION 23, TOWNSHIP 1 NORTH, RANGE 6 EAST OF THE GILA AND SALT RIVER MERIDIAN, CITY OF MESA, MARICOPA COUNTY, ARIZONA AS SHOWN HEREON, AND HEREBY DECLARES THAT THIS PLAT SETS FORTH THE LOCATION AND GIVES THE DIMENSIONS OF EACH OF THE STREETS, LOTS, TRACTS AND EASEMENTS CONSTITUTING SAME, AND THAT EACH OF THE STREETS, LOTS, TRACTS AND EASEMENTS SHALL BE KNOWN BY THE NAME, NUMBER, OR LETTER GIVEN TO IT RESPECTIVELY.

WILLIAM LYON HOMES, INC., A CALIFORNIA CORPORATION, HEREBY DEDICATES AND CONVEYS TO THE CITY OF MESA, IN FEE, ALL REAL PROPERTY DESIGNATED ON THIS PLAT AS "RIGHT-OF-WAY" OR "R/W" FOR USE AS PUBLIC RIGHT-OF-WAY.

EACH OF THE OWNERS, AS TO THE PORTION OF THE PROPERTY OWNED BY THAT OWNER, HEREBY DEDICATES TO THE CITY OF MESA FOR USE AS SUCH THE VEHICULAR NON-ACCESS EASEMENTS AND PUBLIC UTILITY AND FACILITY EASEMENTS, AS SHOWN ON THE SAID PLAT AND INCLUDED IN THE ABOVE DESCRIBED PREMISES. PUBLIC UTILITY AND FACILITY EASEMENTS ARE FOR PURPOSES OF ESTABLISHING AREAS FOR CITY USE TO CONSTRUCT, INSTALL, ACCESS, MAINTAIN, REPAIR, RECONSTRUCT, REPLACE, REMOVE, UTILITIES AND FACILITIES (INCLUDING, BUT NOT LIMITED TO, WATER, WASTEWATER, GAS, ELECTRIC, STORM WATER, PIPES, CONDUIT, CABLES, AND SWITCHING EQUIPMENT), CONDUCTORS, CABLES, FIBER OPTICS, COMMUNICATION AND SIGNAL LINES, TRANSFORMERS, VAULTS, MANHOLES, CONDUITS, PIPES AND CABLES, FIRE HYDRANTS, STREET LIGHTS, STREET PAVEMENT, CURBS, GUTTERS, SIDEWALKS, TRAFFIC SIGNALS, EQUIPMENT AND SIGNS, PUBLIC TRANSIT FACILITIES, SHELTERS AND IMPROVEMENTS, LANDSCAPING, STORM DRAINAGE, WATER RETENTION AND DETENTION, FLOOD CONTROL, AND ALL APPURTENANCES TO ALL OF THE FOREGOING, AND ALL SIMILAR AND RELATED PURPOSES TO THE FOREGOING, TOGETHER WITH THE RIGHT TO ALTER GROUND LEVEL BY CUT OR FILL AND THE UNRESTRICTED RIGHT OF VEHICULAR AND PEDESTRIAN INGRESS AND EGRESS TO, FROM, AND ACROSS THE EASEMENT PROPERTY. ADDITIONALLY, THE CITY IS AUTHORIZED TO PERMIT OTHERS TO USE THE PUBLIC UTILITY AND FACILITY EASEMENT PROPERTY FOR ALL USES AND FACILITIES ALLOWED HEREIN. ALL OTHER EASEMENTS ARE HEREBY DEDICATED FOR THE PURPOSES SHOWN. CONSTRUCTION WITHIN EASEMENTS, EXCEPT BY PUBLIC AGENCIES AND UTILITY COMPANIES, SHALL BE LIMITED TO UTILITIES, AND WOOD, WIRE, OR REMOVABLE SECTION TYPE FENCING. UNLESS APPROVED OTHERWISE BY THE CITY OF MESA, ALL EASEMENTS CREATED BY THIS PLAT ARE PERPETUAL AND NONEXCLUSIVE EASEMENTS.

IT IS AGREED THAT WILLIAM LYON HOMES, INC., A CALIFORNIA CORPORATION, OR ITS SUCCESSORS OR ASSIGNS SHALL HAVE FULL USE OF THE EASEMENT EXCEPT FOR THE PURPOSE FOR WHICH THE SAME IS HEREIN CONVEYED TO THE CITY OF MESA, AND PROVIDED ALWAYS THAT NO BUILDING OR STRUCTURE OF ANY NATURE OR KIND WHATSOEVER, INCLUDING WITHOUT LIMITATION FENCES, NOR ANY PART OF SAME, SHALL BE CONSTRUCTED, INSTALLED OR PLACED ON OR OVER SAID EASEMENT OR ANY PART THEREOF BY WILLIAM LYON HOMES, INC., A CALIFORNIA CORPORATION, OR THE SUCCESSORS OR ASSIGNS OF WILLIAM LYON HOMES, INC., A CALIFORNIA CORPORATION, AND THAT THE GRADE OVER ANY BURIED FACILITIES SHALL NOT BE CHANGED BY WILLIAM LYON HOMES, INC., A CALIFORNIA CORPORATION, OR THE SUCCESSORS OR ASSIGNS OF WILLIAM LYON HOMES, INC., A CALIFORNIA CORPORATION, WITHOUT PRIOR WRITTEN CONSENT OF THE CITY OF MESA. THE RIGHTS AND OBLIGATIONS OF THE CITY OF MESA SHALL BE CONSTRUED BROADLY AND CONSISTENT WITH THE PERFORMANCE OF ITS OBLIGATIONS TO PROVIDE UTILITY SERVICE TO ITS CUSTOMERS.

WILLIAM LYON HOMES, INC., A CALIFORNIA CORPORATION, HEREBY GRANTS TO THE CITY OF MESA A PERMANENT, NON-EXCLUSIVE EASEMENT OVER, ACROSS, UNDER AND UPON ALL AREAS DESIGNATED ON THIS PLAT AS "SIGHT VISIBILITY EASEMENT" OR "SVE" FOR PURPOSES OF ESTABLISHING AREAS WITHIN WHICH NO LANDSCAPING OTHER THAN GROUND COVER, FLOWERS AND GRANITE LESS THAN 2-FEET (MATURE) IN HEIGHT, AND/OR TREES WITH BRANCHES NOT LESS THAN 8-FEET ABOVE GROUND, WHICH TREES, IF ANY, MUST BE SPACED NOT LESS THAN 8 FEET APART.

WILLIAM LYON HOMES, INC., A CALIFORNIA CORPORATION, HEREBY GRANTS TO THE CITY OF MESA A PERMANENT, NON-EXCLUSIVE EASEMENT OVER, ACROSS, UNDER AND UPON ALL AREAS DESIGNATED ON THIS PLAT AS "VEHICULAR NON-ACCESS EASEMENT" OR "VNAE" FOR PURPOSES OF ESTABLISHING AREAS WITHIN WHICH NO VEHICULAR ACCESS IS PERMITTED.

THE DRAINAGE EASEMENTS SHOWN ON THIS PLAT AS TRACT A, B AND C ARE HEREBY RESERVED AS A DRAINAGE FACILITY AND RETENTION BASIN FOR THE INCLUSIVE CONVEYANCE OF DRAINAGE AND STORAGE OF DRAINAGE FOR THIS SUBDIVISION AND FOR THE PUBLIC RIGHTS-OF-WAY PER THE APPROVED IMPROVEMENT PLANS ON FILE WITH THE CITY OF MESA, TOGETHER WITH THE RIGHT TO INGRESS AND EGRESS TO MAINTAIN SAID DRAINAGE FACILITY.

THE DRAINAGE FACILITIES AND RETENTION AREAS SHALL BE MAINTAINED BY THE OWNER, HIS SUCCESSORS AND ASSIGNS AND SHALL PROVIDE STORM WATER CONVEYANCE AND STORAGE AS PRIVATE DRAINAGE FACILITIES AND PRIVATE RETENTION BASINS ADEQUATE TO CONVEY AND STORE DRAINAGE FROM SAID PUBLIC RIGHTS-OF-WAY PER THE APPROVED IMPROVEMENT PLANS ON FILE WITH THE CITY OF MESA;

THE AGREEMENTS CONTAINED HEREIN SHALL BE A COVENANT RUNNING WITH THE LAND AND, UPON RECORDING, SHALL BE BINDING UPON ANY SUBSEQUENT PURCHASER OR OCCUPIER OF SAID PARCEL; AND

THIS COVENANT CAN BE ENFORCED OR REMOVED BY THE CITY OF MESA, WHO CAN BRING PROCEEDINGS AT LAW OR IN EQUITY AGAINST THE PERSON OR PERSONS VIOLATING OR ATTEMPTING OR THREATENING TO VIOLATE ANY OF THESE COVENANTS, TO PREVENT HIM OR THEM FROM SO DOING, AND TO RECOVER DAMAGES FOR SUCH VIOLATIONS. ANY PERSON OR PERSONS OF THE CITY OF MESA PROSECUTING ANY PROCEEDINGS AT LAW OR IN EQUITY HEREUNDER SHALL HAVE THE RIGHT TO RECOVER, IN ADDITION TO ANY DAMAGES, A REASONABLE SUM AS AND FOR ATTORNEY'S FEES AND COURT COSTS.

WILLIAM LYON HOMES, INC., A CALIFORNIA CORPORATION, WARRANTS AND REPRESENTS TO THE CITY OF MESA THAT IT IS THE SOLE OWNER OF THE PROPERTY COVERED BY THIS PLAT, AND THAT EVERY LENDER, EASEMENT HOLDER OR OTHER PERSON OR ENTITY HAVING ANY INTEREST THAT IS ADVERSE TO OR INCONSISTENT WITH THE FOREGOING DEDICATION, OR ANY OTHER REAL PROPERTY INTEREST CREATED OR TRANSFERRED BY THIS PLAT, HAS CONSENTED TO OR JOINED IN THIS PLAT AS EVIDENCED BY INSTRUMENTS WHICH ARE RECORDED WITH THE MARICOPA COUNTY RECORDER'S OFFICE OR WHICH WILLIAM LYON HOMES, INC., A CALIFORNIA CORPORATION, WILL RECORD NOT LATER THAN THE DATE ON WHICH THIS PLAT IS RECORDED.

IN WITNESS WHEREOF:

WILLIAM LYON HOMES, INC., A CALIFORNIA CORPORATION, AS OWNER, HAS HERETO CAUSED ITS NAME TO BE AFFIXED AND THE SAME TO BE ATTESTED BY THE SIGNATURE OF THE UNDERSIGNED OFFICER

THIS_____ DAY OF_____, 2014.

WILLIAM LYON HOMES, INC., A CALIFORNIA CORPORATION,

BY _____ IT'S SR. VICE PRESIDENT
JULIE E. COLLINS

NOTARY ACKNOWLEDGMENT

STATE OF ARIZONA)
) SS.
COUNTY OF MARICOPA)

BEFORE ME THIS _____DAY OF _____, 2014, JULIE E. COLLINS PERSONALLY APPEARED BEFORE ME, THE UNDERSIGNED NOTARY PUBLIC, WHO ACKNOWLEDGED HERSELF TO THE SR. VICE PRESIDENT OF WILLIAM LYON HOMES, INC., A LEGAL OWNER OF THE PROPERTY PLATTED HEREON, AND ACKNOWLEDGED THAT SHE, AS SR. VICE PRESIDENT, EXECUTED THIS INSTRUMENT FOR THE PURPOSES HEREIN CONTAINED.

IN WITNESS WHEREOF, I HEREUNTO SET MY HAND AND OFFICIAL SEAL.

BY:_____ MY COMMISSION EXPIRES_____
NOTARY PUBLIC DATE

OWNER/DEVELOPER

WILLIAM LYON HOMES, INC.
8840 EAST CHAPARRAL RD., STE 200
SCOTTSDALE, ARIZONA 85250
ATTENTION: CHARLIE CALDWELL
PHONE: 480-893-1000
FAX: 480-850-3746

CONSULTANT

ATWELL, LLC
4700 EAST SOUTHERN AVE.,
MESA, ARIZONA 85206
ATTENTION: JAMES B. RICHARDS, RLS
PHONE: 480-218-8831
FAX: 480-830-4888

BASIS OF BEARING

BASIS OF BEARING IS ALONG THE EAST LINE OF 57TH PLACE PER VELDA ROSE COUNTY CLUB PLAT PER BOOK 94, PAGE 19, MARICOPA COUNTY RECORDS IN THE NORTHEAST QUARTER OF SECTION 23, T.1N., R.6E. BEING NORTH 00°30'55" EAST, BETWEEN THE MONUMENTS AS SHOWN.

ALBANY VILLAGE COMMUNITY ASSOCIATION RATIFICATION

BY THIS RATIFICATION, _____, DULY ELECTED PRESIDENT OF THE ALBANY VILLAGE CROSSING COMMUNITY ASSOCIATION, ACKNOWLEDGES THE RESPONSIBILITIES DEDICATED HEREON.

BY: _____, ITS:_____

NOTARY ACKNOWLEDGMENT

STATE OF ARIZONA)
) SS.
COUNTY OF MARICOPA)

ON THIS _____ DAY OF _____, 2014, BEFORE ME, THE UNDERSIGNED,

PERSONALLY APPEARED _____, WHO ACKNOWLEDGED SELF TO BE THE PERSON WHOSE NAME IS SUBSCRIBED TO THE INSTRUMENT WITHIN, AND WHO EXECUTED THE FOREGOING INSTRUMENT FOR THE PURPOSES THEREIN CONTAINED.

IN WITNESS WHEREOF, I HEREUNTO SET MY HAND AND OFFICIAL SEAL.

BY:_____ MY COMMISSION EXPIRES_____
NOTARY PUBLIC DATE

APPROVALS

APPROVED BY THE MAYOR AND CITY COUNCIL OF THE CITY OF MESA, ARIZONA, ON

THIS _____ DAY OF_____, 2014

APPROVED BY: _____
MAYOR

ATTEST:_____
CLERK

THIS IS TO CERTIFY THAT THE AREA PLATTED HEREON IS APPROVED AND LIES WITHIN THE DOMESTIC WATER SERVICE AREA OF THE CITY OF MESA, WHICH IS DESIGNATED AS HAVING AN ASSURED WATER SUPPLY IN ACCORDANCE WITH ARS 45-576.

APPROVED BY:_____
CITY ENGINEER DATE

SHEET INDEX

DESCRIPTION	SHEET NO
COVER SHEET	1
LEGAL DESCRIPTION & KEY MAP	2
DETAIL SHEET	3
PLAT SHEETS	4-7

AREA CALCULATIONS

TRACTS	513,782 SQ. FT.	11.795 AC. FT.
LOTS	623,249 SQ. FT.	14.308 AC. FT.
RIGHT OF WAY	149,743 SQ. FT.	3.438 AC. FT.
TOTAL	1,286,774 SQ. FT.	29.540 AC. FT.

GENERAL NOTES

1. ALL UTILITIES WILL BE LOCATED UNDERGROUND.
2. NOISE ATTENUATION MEASURES ARE TO BE INCORPORATED INTO THE DESIGN AND CONSTRUCTION OF THE HOMES TO ACHIEVE A NOISE LEVEL REDUCTION OF 25 DECIBELS.
3. A COMMUNITY ASSOCIATION INCLUDING ALL PROPERTY OWNERS WITHIN THE SUBDIVISION HAS BEEN FORMED AND WILL HAVE RESPONSIBILITY FOR OWNING AND MAINTAINING ALL COMMON AREAS NOTED AS TRACTS.
4. ALL INDIVIDUAL LOT PROPERTY CORNERS SHALL BE SET WITH 1/2" REBAR AND CAP BEARING THE REGISTRATION NUMBER OF THE SURVEYOR UPON RECORDATION OF THIS PLAT.
5. THE FOLLOWING CRITERIA APPLIES TO VISIBILITY EASEMENTS: GROUND COVER, FLOWERS, AND GRANITE LESS THAN 2' (MATURE) IN HEIGHT AND/OR TREES WITH BRANCHES NOT LESS THAN 6' ABOVE GROUND ARE ALLOWED WITHIN THIS AREA. TREES SHALL NOT BE SPACED LESS THAN 8' APART.
6. THIS SUBDIVISION IS SUBJECT TO THE CITY OF MESA RESIDENTIAL DEVELOPMENT GUIDELINES.
7. THE MAINTENANCE OF THE LANDSCAPING WITHIN THE OPEN SPACES, LANDSCAPED TRACTS, RETENTION BASINS, PARKS, AND ADJACENT RIGHTS-OF-WAYS SHALL BE THE RESPONSIBILITY OF THE COMMUNITY ASSOCIATION AS MORE FULLY SET FORTH IN THE DECLARATION OF COVENANTS, CONDITIONS AND RESTRICTIONS.
8. THE CITY OF MESA WILL NOT BE RESPONSIBLE FOR ANY SPECIAL PAVEMENT NOTED WITHIN THIS DEVELOPMENT. SHOULD REMOVAL OF SPECIAL PAVEMENT BE REQUIRED BY THE CITY OF MESA FOR MAINTENANCE OF THE UTILITY LINES, THE CITY WILL ONLY BE REQUIRED TO BACKFILL AND PROVIDE TEMPORARY ASPHALT PAVEMENT OVER THE UTILITY. RECONSTRUCTION OF THE SPECIAL PAVEMENT SHALL BE THE RESPONSIBILITY OF THE ALBANY VILLAGE COMMUNITY ASSOCIATION.
9. NO STRUCTURE OF ANY KIND SHALL BE CONSTRUCTED, OR ANY VEGETATION PLANTED, NOR BE ALLOWED TO GROW WITHIN DRAINAGE AREAS (TRACTS, EASEMENTS, ETC.) WHICH WOULD IMPEDE THE FLOW OF WATER OVER, UNDER, OR THROUGH THE DRAINAGE AREAS.
10. A DECLARATION OF COVENANTS, CONDITIONS AND RESTRICTIONS (C.C.& R.'S) HAS BEEN RECORDED FOR THIS SUBDIVISION WHICH WILL GOVERN THE USE AND MAINTENANCE OF ALL AREAS SHOWN THIS PLAT.
11. LOTS NOTED ON THE KEY MAP WITH AN ASTERISK SHALL HAVE AN AUTOMATIC FIRE SPRINKLER SYSTEM INSTALLED IN THE DWELLING.
12. THERE SHALL BE NO BUILDING OF ANY STRUCTURE WITHIN ADJACENT HOA TRACTS THAT WOULD COMPROMISE THE 10' BUILDING SEPARATION REQUIREMENT.
13. THE STAMPED ASPHALT-PAVEMENT WILL NEED TO BE MAINTAINED BY THE COMMUNITY HOMEOWNERS ASSOCIATION.

SURVEYOR'S CERTIFICATION

I, EDWIN M. BALLIET, HEREBY CERTIFY THAT I AM A REGISTERED LAND SURVEYOR IN THE STATE OF ARIZONA; THAT THIS MAP OR PLAT CONSISTING OF SEVEN (7) SHEETS REPRESENTS A SURVEY PERFORMED UNDER MY SUPERVISION DURING THE MONTH OF MAY 2014; THAT THIS SURVEY IS CORRECT AND ACCURATE TO THE BEST OF MY KNOWLEDGE AND BELIEF; THAT THE BOUNDARY MONUMENTS AND LOT CORNERS HAVE BEEN LOCATED AS SHOWN AND ARE SUFFICIENT TO ENABLE THE SURVEY TO BE RETRACED.

EDWIN M. BALLIET, RLS 31587
ATWELL, LLC
4700 E. SOUTHERN AVE.
MESA, ARIZONA 85206
PHONE (480) 218-8831
FAX (480) 830-4888

REGISTERED LAND SURVEYOR
CERTIFICATE NO. 31587
EDWIN M. BALLIET
Date Signed 10-22-14
ARIZONA, U.S.A.
Expires 09/30/2015

NOTE:
A.R.S. 32-151 STATES THAT THE USE OF THE WORD "CERTIFY" OR "CERTIFICATION" BY A PERSON OR FIRM THAT IS REGISTERED OR CERTIFIED BY THE BOARD IS AN EXPRESSION OF PROFESSIONAL OPINION REGARDING FACTS OR FINDINGS THAT ARE SUBJECT OF THE CERTIFICATION AND DOES NOT CONSTITUTE AN EXPRESS OR IMPLIED WARRANTY OR GUARANTEE.

N.T.S.

VICINITY MAP

SECTION 23, T.1N., R.6E.

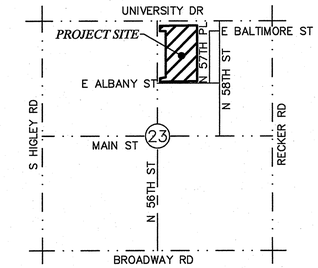

ATWELL
866.850.4200 | www.atwell-group.com
MESA, ARIZONA
Land Development & Real Estate
Power & Energy
Telecommunications
Infrastructure & Transportation
Environmental & Solid Waste
Water & Natural Resources

COUNTY: MARICOPA
SECTION: 23
TOWNSHIP: 1 NORTH
RANGE: 6 EAST

PROJECT: FINAL PLAT
ALBANY VILLAGE
MESA, ARIZONA

DATE OCTOBER 2014
REVISIONS

ATWELL
N.T.S.

DR. RG	CH. EB
P.M. E. BALLIET	
CAD FILE: 13000528 FP.DWG	
JOB 13000528	
SHEET NO. 1 OF 7	

k:\13000528\dwg\survey\final plat\13000528 fp.dwg Savedate:10/22/2014 12:16 PM Plotdate:10/22/2014 1:52 PM

COPYRIGHT © 2014 ATWELL. NO REPRODUCTION SHALL BE MADE WITHOUT THE PRIOR WRITTEN CONSENT OF ATWELL

LEGAL DESCRIPTION

A PORTION OF TRACT "A", VELDA ROSE COUNTRY CLUB ADDITION, ACCORDING TO BOOK 94 OF MAPS, PAGE 19, RECORDS OF MARICOPA COUNTY, ARIZONA;

COMMENCING AT A MARICOPA COUNTY DEPARTMENT OF TRANSPORTATION BRASS CAP FLUSH ACCEPTED AS THE NORTH QUARTER CORNER, OF SAID SECTION 23, TOWNSHIP 1 NORTH, RANGE 6 EAST, FROM WHICH A MARICOPA COUNTY DEPARTMENT OF TRANSPORTATION BRASS CAP FLUSH ACCEPTED AS THE NORTHEAST CORNER OF SAID SECTION 24, BEARS S89°54'25"E;

THENCE ALONG THE NORTH–SOUTH MID–SECTION LINE OF SAID SECTION 23, S00°29'47"W, 199.58 FEET;

THENCE LEAVING SAID NORTH–SOUTH MID–SECTION LINE OF SAID SECTION 23, S89°54'25"W, 40.00 FEET TO THE EAST RIGHT OF WAY LINE OF NORTH 56TH STREET AND THE POINT OF BEGINNING;

THENCE S89°54'25"E, 996.74 FEET;

THENCE ALONG THE WEST RIGHT OF WAY LINE OF NORTH 57TH PLACE S00°30'55"W, 1,485.24 FEET;

THENCE LEAVING SAID WEST RIGHT OF WAY LINE OF NORTH 57TH PLACE TO A POINT ALONG THE NORTH RIGHT OF WAY OF ALBANY STREET, S89°56'46"W, 996.27 FEET;

THENCE LEAVING THE NORTH RIGHT OF WAY OF ALBANY STREET TO A POINT ALONG THE EAST RIGHT OF WAY LINE OF NORTH 56TH STREET, N00°29'47"E, 58.40 FEET;

THENCE LEAVING SAID EAST RIGHT OF WAY LINE N78°58'09"E, 35.86;

THENCE S86°13'20"E, 39.12 FEET;

THENCE N78°58'09"E, 79.40 FEET;

THENCE N00°29'47"E, 35.72 FEET;

THENCE N00°29'47"E, 1,232.00 FEET;

THENCE N89°30'13"W, 152.00 FEET TO THE EAST RIGHT OF WAY LINE OF NORTH 56TH STREET;

THENCE ALONG THE EAST RIGHT OF WAY LINE OF NORTH 56TH STREET N00°29'47"E, 140.88 FEET TO THE POINT OF BEGINNING.

LEGEND

- SECTION LINE
- MONUMENT LINE
- RIGHT–OF–WAY LINE
- PROPERTY LINE
- OTHERS PROPERTY LINE
- PROPOSED EASEMENT IN LOTS
- PUBLIC UTILITY EASEMENT
- PROPOSED EASEMENT
- VEHICULAR NON–ACCESS EASEMENT
- SUBDIVISION CORNER, SET REBAR W/CAP, OR AS NOTED
- FOUND MONUMENT AS NOTED
- FOUND BRASS CAP IN HANDHOLE
- PROPOSED BRASS CAP
- TRASH AREA
- EXST. EXISTING
- PUFE PUBLIC UTILITY EASEMENT
- R.O.W. RIGHT OF WAY
- S.V.T. SIGHT VISIBILITY TRIANGLE
- * FIRE SPRINKLER LOT

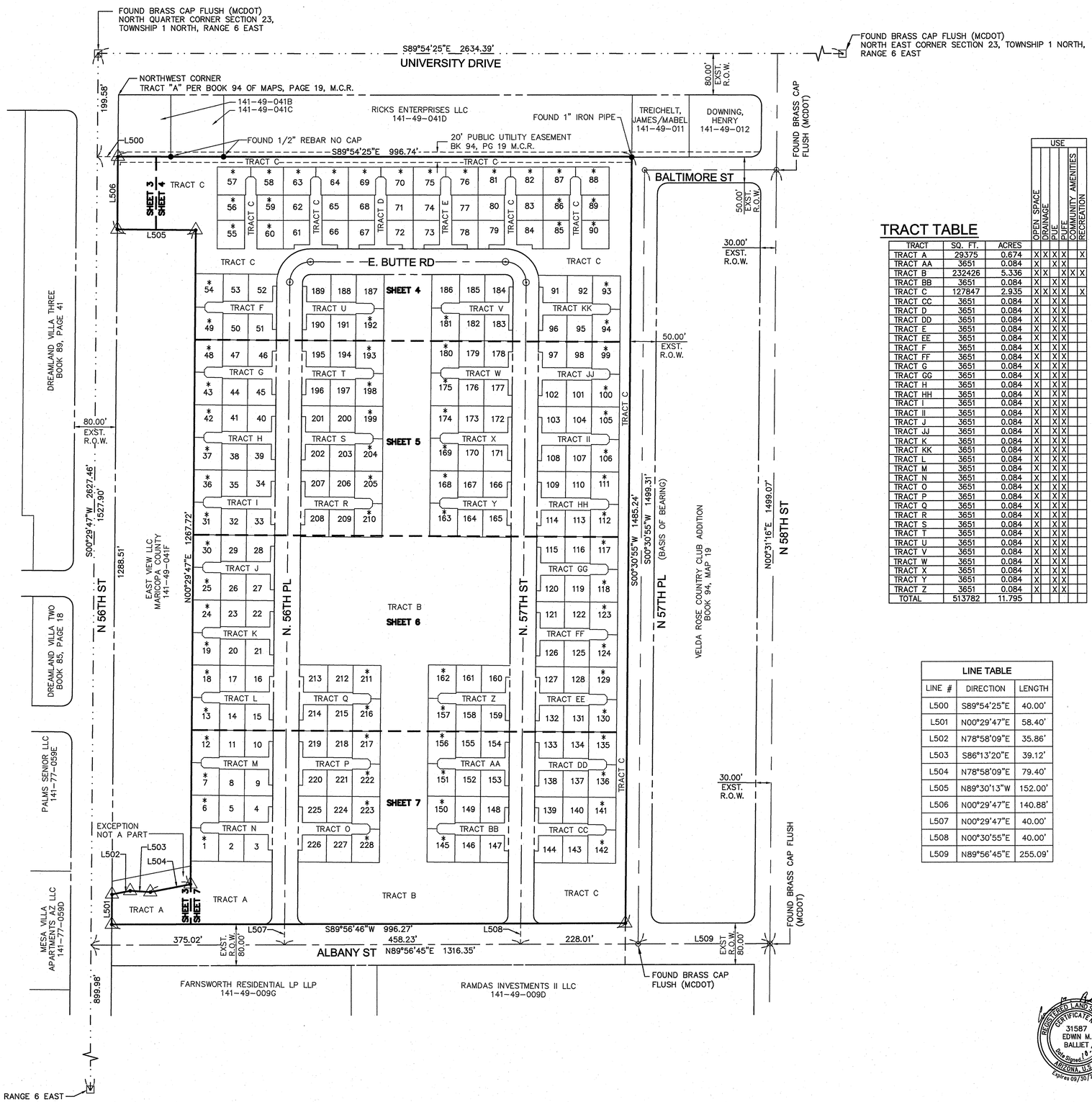

TRACT TABLE

TRACT	SQ. FT.	ACRES	OPEN SPACE	DRAINAGE	PUE	PUFE	COMMUNITY AMENITIES	RECREATION
TRACT A	29375	0.674	X	X	X	X		X
TRACT AA	3651	0.084	X		X	X		
TRACT B	232426	5.336	X	X		X	X	X
TRACT BB	3651	0.084	X		X	X		
TRACT C	127847	2.935	X	X	X	X		X
TRACT CC	3651	0.084	X		X	X		
TRACT D	3651	0.084	X		X	X		
TRACT DD	3651	0.084	X		X	X		
TRACT E	3651	0.084	X		X	X		
TRACT EE	3651	0.084	X		X	X		
TRACT F	3651	0.084	X		X	X		
TRACT FF	3651	0.084	X		X	X		
TRACT G	3651	0.084	X		X	X		
TRACT GG	3651	0.084	X		X	X		
TRACT H	3651	0.084	X		X	X		
TRACT HH	3651	0.084	X		X	X		
TRACT I	3651	0.084	X		X	X		
TRACT II	3651	0.084	X		X	X		
TRACT J	3651	0.084	X		X	X		
TRACT JJ	3651	0.084	X		X	X		
TRACT K	3651	0.084	X		X	X		
TRACT KK	3651	0.084	X		X	X		
TRACT L	3651	0.084	X		X	X		
TRACT M	3651	0.084	X		X	X		
TRACT N	3651	0.084	X		X	X		
TRACT O	3651	0.084	X		X	X		
TRACT P	3651	0.084	X		X	X		
TRACT Q	3651	0.084	X		X	X		
TRACT R	3651	0.084	X		X	X		
TRACT S	3651	0.084	X		X	X		
TRACT T	3651	0.084	X		X	X		
TRACT U	3651	0.084	X		X	X		
TRACT V	3651	0.084	X		X	X		
TRACT W	3651	0.084	X		X	X		
TRACT X	3651	0.084	X		X	X		
TRACT Y	3651	0.084	X		X	X		
TRACT Z	3651	0.084	X		X	X		
TOTAL	513782	11.795						

USE

LINE TABLE

LINE #	DIRECTION	LENGTH
L500	S89°54'25"E	40.00'
L501	N00°29'47"E	58.40'
L502	N78°58'09"E	35.86'
L503	S86°13'20"E	39.12'
L504	N78°58'09"E	79.40'
L505	N89°30'13"W	152.00'
L506	N00°29'47"E	140.88'
L507	N00°29'47"E	40.00'
L508	N00°30'55"E	40.00'
L509	N89°56'45"E	255.09'

REGISTERED LAND SURVEYOR CERTIFICATE NO. 31587 EDWIN M. BALLIET Date Signed 10-22-14 ARIZONA, U.S.A. Expires 09/30/2015

Land Development & Real Estate
Power & Energy
Telecommunications
Infrastructure & Transportation
Environmental & Solid Waste
Water & Natural Resources

ATWELL
866.850.4200 | www.atwell-group.com
MESA, ARIZONA

COUNTY: MARICOPA
SECTION: 23
TOWNSHIP: 1 NORTH
RANGE: 6 EAST

FINAL PLAT

PROJECT:

ALBANY VILLAGE

MESA, ARIZONA

DATE OCTOBER 2014

REVISIONS

ATWELL

SCALE 0 50 100
1" = 100 FEET

DR. RG | CH. EB
P.M. E. BALLIET
CAD FILE: 13000528 FP.DWG
JOB 13000528
SHEET NO. 2 OF 7

k:\13000528\dwg\survey\final plat\13000528 fp.dwg Savedate:10/22/2014 10:57 AM Plotdate:10/22/2014 11:11 AM

COPYRIGHT © 2014 ATWELL. NO REPRODUCTION SHALL BE MADE WITHOUT THE PRIOR WRITTEN CONSENT OF ATWELL

TYPICAL BUILDING SETBACK DIAGRAM

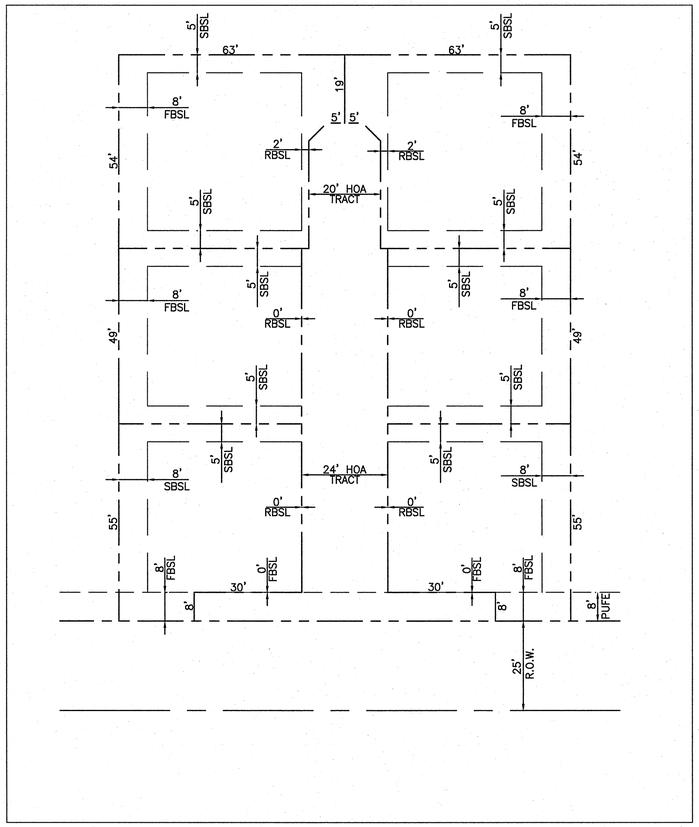

BUILDING SETBACK TABLE

MINIMUM LOT SIZE MIN. DIMENSIONS	MINIMUM FRONT SETBACK	MINIMUM SIDE SETBACK	MINIMUM REAR SETBACK	MAXIMUM HEIGHT
2,499 SF MINIMUM 49' X 51' (CORNER LOT WIDTH – 55')	0' FRONT (8' TO RIGHT OF WAY)	8' STREET SIDE 5' INT. SIDE 10' INT. SIDE TOTAL	0' REAR (12' TO DRIVEWAY C/L)	30' 2 STORIES

BENEFIT EASEMENT

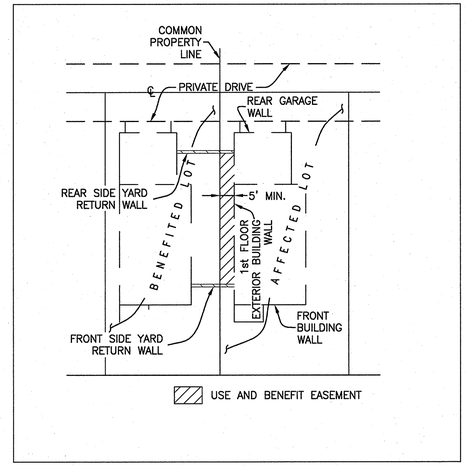

TYPICAL PUBLIC UTILITY EASEMENT DIAGRAM DETAIL FACING NORTH AND WEST

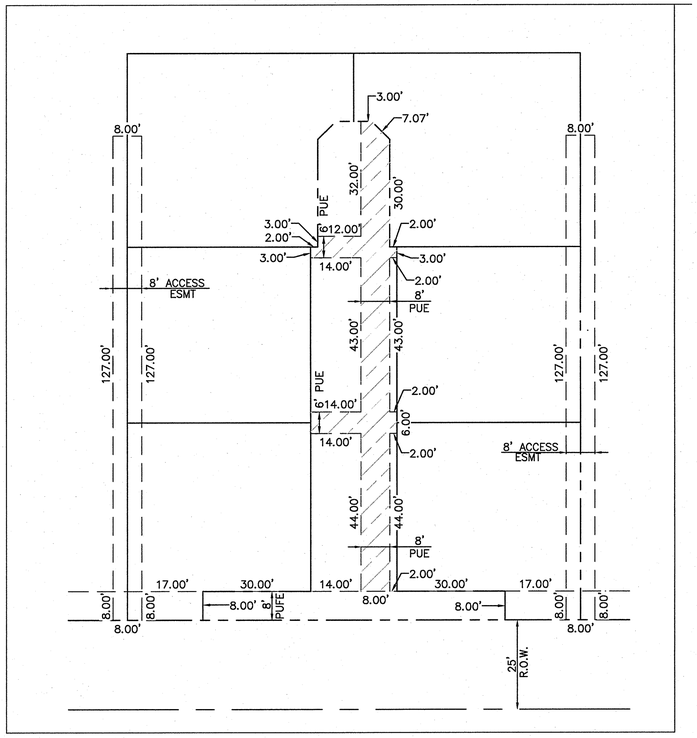

TYPICAL PUBLIC UTILITY EASEMENT DIAGRAM DETAIL FACING EAST

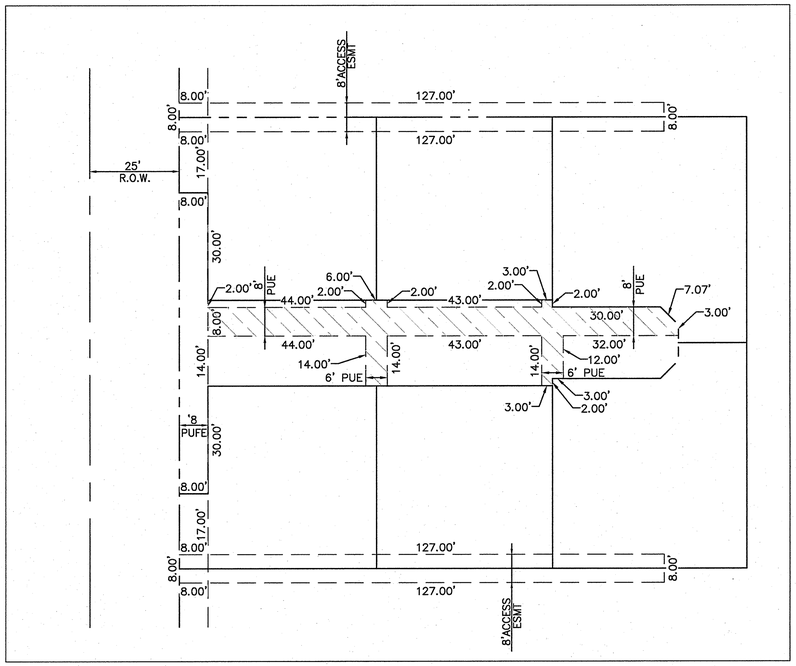

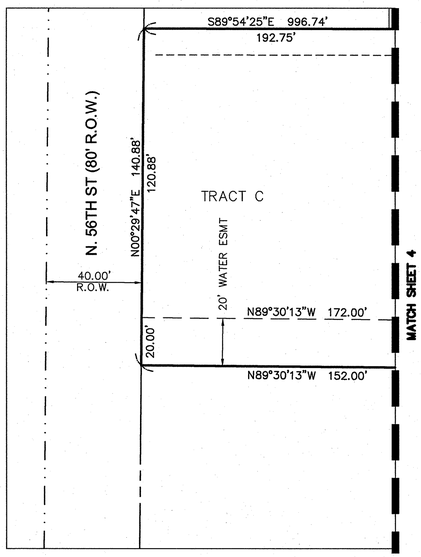

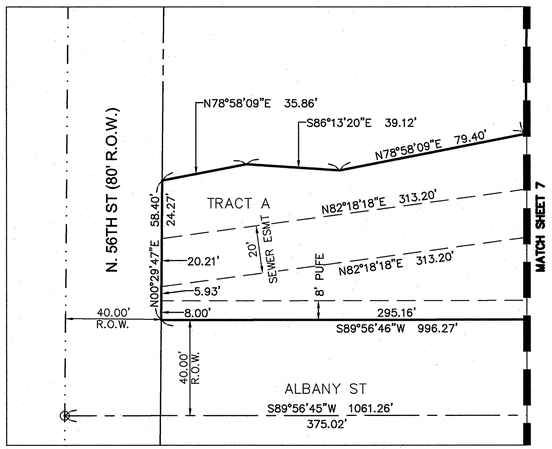

Land Development & Real Estate
Power & Energy
Telecommunications
Infrastructure & Transportation
Environmental & Solid Waste
Water & Natural Resources

ATWELL
866.850.4200 | www.atwell-group.com
MESA, ARIZONA

COUNTY: MARICOPA
SECTION: 23
TOWNSHIP: 1 NORTH
RANGE: 6 EAST

PROJECT:
FINAL PLAT
ALBANY VILLAGE
MESA, ARIZONA

DATE OCTOBER 2014

REVISIONS

ATWELL

SCALE 0 15 30
1" = 30 FEET
DR. RG | CH. EB
P.M. E. BALLIET
CAD FILE: 13000528 FP.DWG
JOB 13000528
SHEET NO. 3 OF 7

k:\13000528\dwg\survey\final plat\13000528 fp.dwg Savedate:10/22/2014 10:57 AM Plotdate:10/22/2014 11:11 AM

COPYRIGHT © 2014 ATWELL. NO REPRODUCTION SHALL BE MADE WITHOUT THE PRIOR WRITTEN CONSENT OF ATWELL

LINE TABLE			LINE TABLE			LINE TABLE			LINE TABLE			LINE TABLE			LINE TABLE			LINE TABLE			LINE TABLE			LINE TABLE			LINE TABLE			LINE TABLE		
LINE #	DIRECTION	LENGTH	LINE #	DIRECTION	LENGTH	LINE #	DIRECTION	LENGTH	LINE #	DIRECTION	LENGTH	LINE #	DIRECTION	LENGTH	LINE #	DIRECTION	LENGTH	LINE #	DIRECTION	LENGTH	LINE #	DIRECTION	LENGTH	LINE #	DIRECTION	LENGTH	LINE #	DIRECTION	LENGTH
L1	S89°54'25"E	2.00'	L13	N45°05'35"E	7.07'	L25	N45°05'35"E	7.07'	L37	N45°05'35"E	7.07'	L49	N45°05'35"E	7.07'	L61	N00°05'35"E	19.00'	L73	N89°29'05"W	30.00'	L85	S89°29'05"E	30.00'	L97	N89°30'13"W	30.00'	L109	N89°30'13"W	30.00'
L2	N00°05'35"E	30.00'	L14	S89°54'25"E	10.00'	L26	S89°54'25"E	10.00'	L38	S89°54'25"E	10.00'	L50	S89°54'25"E	10.00'	L62	S44°54'25"E	7.07'	L74	S00°30'55"W	2.00'	L86	S00°30'55"W	2.00'	L98	S00°29'47"W	2.00'	L110	S00°29'47"W	2.00'
L3	N45°05'35"E	7.07'	L15	N00°05'35"E	19.00'	L27	N00°05'35"E	19.00'	L39	N00°05'35"E	19.00'	L51	N00°05'35"E	19.00'	L63	S00°05'35"W	30.00'	L75	S00°30'55"W	30.00'	L87	N00°30'55"E	30.00'	L99	S00°29'47"W	30.00'	L111	S00°29'47"W	30.00'
L4	S89°54'25"E	10.00'	L16	S44°54'25"E	7.07'	L28	S44°54'25"E	7.07'	L40	S44°54'25"E	7.07'	L52	S44°54'25"E	7.07'	L64	S89°54'25"E	2.00'	L76	N89°29'05"W	8.00'	L88	S89°29'05"E	8.00'	L100	S89°30'13"E	8.00'	L112	N89°30'13"W	8.00'
L5	N00°05'35"E	19.00'	L17	S00°05'35"W	30.00'	L29	S00°05'35"W	30.00'	L41	S00°05'35"W	30.00'	L53	S00°05'35"W	30.00'	L65	S89°29'05"E	8.00'	L77	S89°29'05"E	8.00'	L89	S89°30'13"E	8.00'	L101	S89°30'13"E	8.00'			
L6	S44°54'25"E	7.07'	L18	S89°54'25"E	2.00'	L30	S89°54'25"E	2.00'	L42	S89°54'25"E	2.00'	L54	S89°54'25"E	2.00'	L66	S00°30'55"W	30.00'	L78	S00°30'55"W	30.00'	L90	S00°29'47"W	30.00'	L102	S00°29'47"W	30.00'			
L7	S00°05'35"W	30.00'	L19	N00°05'35"E	8.00'	L31	S89°54'25"E	30.00'	L43	S89°54'25"E	30.00'	L55	S89°54'25"E	30.00'	L67	S00°30'55"W	2.00'	L79	S00°30'55"W	2.00'	L91	S00°29'47"W	2.00'	L103	N00°29'47"E	2.00'			
L8	N89°54'25"W	2.00'	L20	S89°54'25"E	30.00'	L32	S00°05'35"W	8.00'	L44	S00°05'35"W	8.00'	L56	S00°05'35"W	8.00'	L68	S89°29'05"E	30.00'	L80	S89°29'05"E	30.00'	L92	S89°30'13"E	30.00'	L104	S89°30'13"E	30.00'			
L9	N00°05'35"E	8.00'	L21	N00°05'35"E	8.00'	L33	N00°05'35"E	8.00'	L45	N00°05'35"E	8.00'	L57	S89°54'25"E	2.00'	L69	S44°29'05"E	7.07'	L81	S44°29'05"E	7.07'	L93	S44°30'13"E	7.07'	L105	S44°30'13"E	7.07'			
L10	S89°54'25"E	30.00'	L22	S89°54'25"E	30.00'	L34	S89°54'25"E	30.00'	L46	S89°54'25"E	30.00'	L58	N00°05'35"E	30.00'	L70	S00°30'55"W	10.00'	L82	S00°30'55"W	10.00'	L94	S00°29'47"W	10.00'	L106	S00°29'47"W	10.00'			
L11	S89°54'25"E	2.00'	L23	S89°54'25"E	2.00'	L35	S89°54'25"E	2.00'	L47	S89°54'25"E	2.00'	L59	N45°05'35"E	7.07'	L71	S89°29'05"E	19.00'	L83	N89°29'05"W	19.00'	L95	S89°30'13"E	19.00'	L107	N89°30'13"W	19.00'			
L12	N00°05'35"E	30.00'	L24	N00°05'35"E	30.00'	L36	N00°05'35"E	30.00'	L48	N00°05'35"E	30.00'	L60	S89°54'25"E	10.00'	L72	S45°30'55"W	7.07'	L84	S45°30'55"W	7.07'	L96	N45°29'47"E	7.07'	L108	S45°29'47"W	7.07'			

CURVE TABLE				
CURVE #	LENGTH	RADIUS	DELTA	CHORD
C1	101.64'	65.00'	089°35'48"	S45°17'41"W 91.60'
C2	62.55'	40.00'	089°35'48"	S45°17'41"W 56.37'
C3	23.46'	15.00'	089°35'48"	S45°17'41"W 21.14'
C4	23.67'	15.00'	090°25'20"	N44°41'45"W 21.29'
C5	63.13'	40.00'	090°25'20"	N44°41'45"W 56.78'
C6	102.58'	65.00'	090°25'20"	N44°41'45"W 92.26'

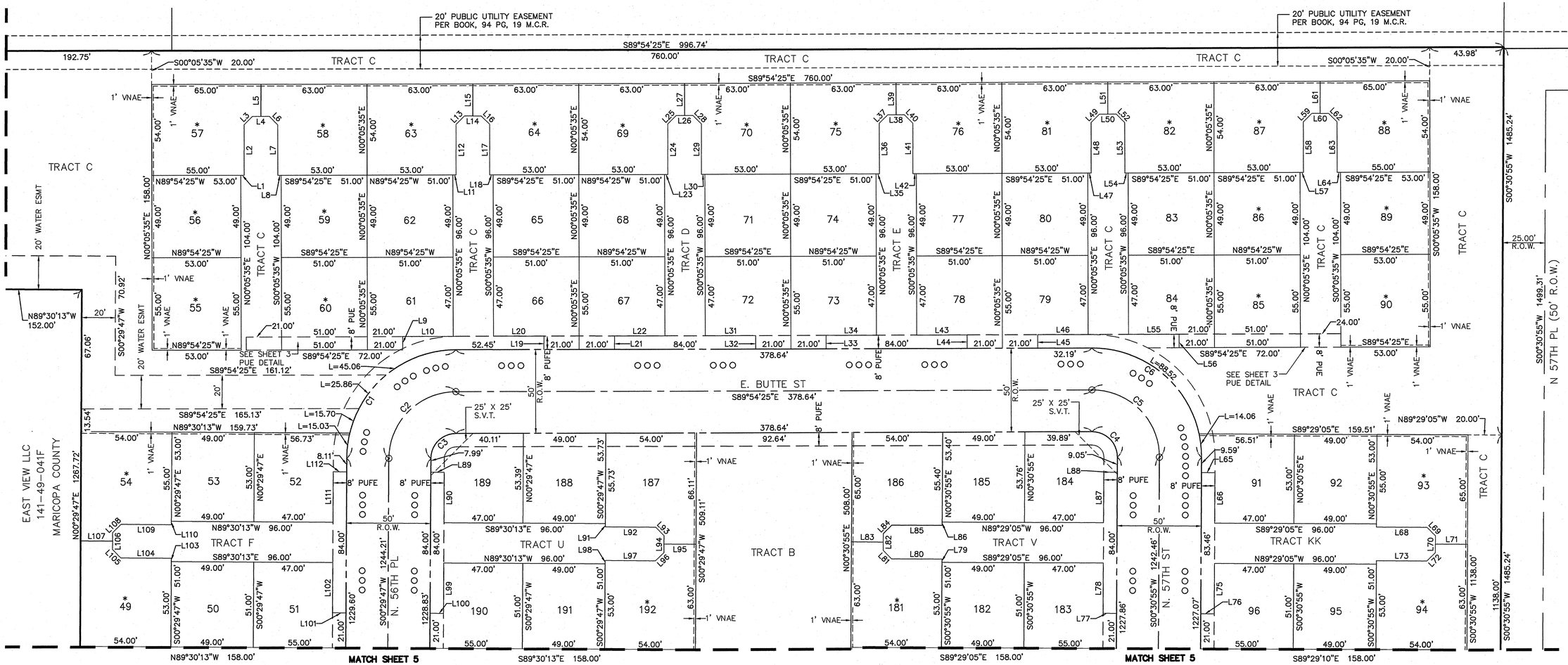

PARCEL TABLE			PARCEL TABLE			PARCEL TABLE			PARCEL TABLE			PARCEL TABLE			PARCEL TABLE		
TRACT	AREA SQ FT	AREA ACRES	TRACT	AREA SQ FT	AREA ACRES	TRACT	AREA SQ FT	AREA ACRES	TRACT	AREA SQ FT	AREA ACRES	TRACT	AREA SQ FT	AREA ACRES	TRACT	AREA SQ FT	AREA ACRES
LOT 49	3064	0.070	LOT 59	2499	0.057	LOT 69	3065	0.070	LOT 79	2565	0.059	LOT 89	2597	0.060	LOT 183	2565	0.059
LOT 50	2499	0.057	LOT 60	2805	0.064	LOT 70	3064	0.070	LOT 80	2499	0.057	LOT 90	2915	0.067	LOT 184	2679	0.061
LOT 51	2565	0.059	LOT 61	2565	0.059	LOT 71	2499	0.057	LOT 81	3065	0.070	LOT 91	2682	0.062	LOT 185	2625	0.060
LOT 52	2684	0.062	LOT 62	2499	0.057	LOT 72	2565	0.059	LOT 82	3065	0.070	LOT 92	2597	0.060	LOT 186	3183	0.073
LOT 53	2597	0.060	LOT 63	3065	0.070	LOT 73	2565	0.059	LOT 83	2499	0.057	LOT 93	3172	0.073	LOT 187	3222	0.074
LOT 54	3172	0.073	LOT 64	3065	0.070	LOT 74	2499	0.057	LOT 84	2565	0.059	LOT 94	3065	0.070	LOT 188	2624	0.060
LOT 55	2915	0.067	LOT 65	2499	0.057	LOT 75	3065	0.070	LOT 85	2805	0.064	LOT 95	2499	0.057	LOT 189	2638	0.061
LOT 56	2597	0.060	LOT 66	2565	0.059	LOT 76	3064	0.070	LOT 86	2499	0.057	LOT 96	2565	0.059	LOT 190	2565	0.059
LOT 57	3173	0.073	LOT 67	2565	0.059	LOT 77	2499	0.057	LOT 87	3065	0.070	LOT 181	3065	0.070	LOT 191	2499	0.057
LOT 58	3065	0.070	LOT 68	2499	0.057	LOT 78	2565	0.059	LOT 88	3173	0.073	LOT 182	2499	0.057	LOT 192	3064	0.070

LEGEND

- SECTION LINE
- MONUMENT LINE
- RIGHT-OF-WAY LINE
- PROPERTY LINE
- OTHERS PROPERTY LINE
- PROPOSED EASEMENT IN LOTS
- PUBLIC UTILITY EASEMENT
- PROPOSED EASEMENT
- VEHICULAR NON-ACCESS EASEMENT
- SUBDIVISION CORNER, SET REBAR W/CAP, OR AS NOTED
- FOUND MONUMENT AS NOTED
- FOUND BRASS CAP IN HANDHOLE
- PROPOSED BRASS CAP
- TRASH AREA
- EXST. EXISTING
- PUFE PUBLIC UTILITY EASEMENT
- R.O.W. RIGHT OF WAY
- S.V.T. SIGHT VISIBILITY TRIANGLE
- * FIRE SPRINKLER LOT

REGISTERED LAND SURVEYOR CERTIFICATE NO. 31587 EDWIN M. BALLIET Date Signed 10-22-14 ARIZONA, U.S.A. Expires 09/30/2015

Land Development & Real Estate
Power & Energy
Telecommunications
Infrastructure & Transportation
Environmental & Solid Waste
Water & Natural Resources

ATWELL
866.850.4200 | www.atwell-group.com
MESA, ARIZONA

COUNTY: MARICOPA
SECTION: 23
TOWNSHIP: 1 NORTH
RANGE: 6 EAST

PROJECT: FINAL PLAT
ALBANY VILLAGE
MESA, ARIZONA

DATE OCTOBER 2014

REVISIONS

ATWELL

SCALE 0 15 30
1" = 30 FEET
DR. RG | CH. EB
P.M. E. BALLIET
CAD FILE: 13000528 FP.DWG
JOB 13000528
SHEET NO. 4 OF 7

k:\13000528\dwg\survey\final plat\13000528 fp.dwg Savedate:10/22/2014 10:57 AM Plotdate:10/22/2014 11:11 AM

COPYRIGHT © 2014 ATWELL. NO REPRODUCTION SHALL BE MADE WITHOUT THE PRIOR WRITTEN CONSENT OF ATWELL

LINE TABLE			LINE TABLE			LINE TABLE			LINE TABLE			LINE TABLE			LINE TABLE			LINE TABLE			LINE TABLE			LINE TABLE			LINE TABLE			LINE TABLE			LINE TABLE			LINE TABLE		
LINE #	DIRECTION	LENGTH	LINE #	DIRECTION	LENGTH	LINE #	DIRECTION	LENGTH	LINE #	DIRECTION	LENGTH	LINE #	DIRECTION	LENGTH	LINE #	DIRECTION	LENGTH	LINE #	DIRECTION	LENGTH	LINE #	DIRECTION	LENGTH	LINE #	DIRECTION	LENGTH	LINE #	DIRECTION	LENGTH	LINE #	DIRECTION	LENGTH	LINE #	DIRECTION	LENGTH
L113	N89°30'13"W	8.00'	L125	S89°30'13"E	8.00'	L137	N89°29'05"W	8.00'	L149	N89°29'05"W	8.00'	L161	S89°29'05"E	8.00'	L173	S89°29'05"E	8.00'	L185	S89°30'13"E	8.00'	L197	N89°30'13"W	8.00'	L209	N89°30'13"W	8.00'	L221	N89°30'13"W	8.00'	L233	N89°29'05"W	8.00'	L245	N89°29'05"W	8.00'
L114	S00°29'47"W	30.00'	L126	S00°29'47"W	30.00'	L138	S00°30'55"W	30.00'	L150	S00°30'55"W	30.00'	L162	S00°30'55"W	30.00'	L174	S00°30'55"W	30.00'	L186	S00°29'47"W	30.00'	L198	S00°29'47"W	30.00'	L210	S00°29'47"W	30.00'	L222	S00°29'47"W	30.00'	L234	S00°30'55"W	30.00'	L246	S00°30'55"W	30.00'
L115	S00°29'47"W	2.00'	L127	S00°29'47"W	2.00'	L139	S00°30'55"W	2.00'	L151	S00°30'55"W	2.00'	L163	S00°30'55"W	2.00'	L175	S00°30'55"W	2.00'	L187	S00°29'47"W	2.00'	L199	S00°29'47"W	2.00'	L211	S00°29'47"W	2.00'	L223	S00°29'47"W	2.00'	L235	S00°30'55"W	2.00'	L247	S00°30'55"W	2.00'
L116	N89°30'13"W	30.00'	L128	N89°30'13"W	30.00'	L140	N89°29'05"W	30.00'	L152	N89°29'05"W	30.00'	L164	S89°29'05"E	30.00'	L176	S89°29'05"E	30.00'	L188	S89°30'13"E	30.00'	L200	N89°30'13"W	30.00'	L212	N89°30'13"W	30.00'	L224	N89°30'13"W	30.00'	L236	N89°29'05"W	30.00'	L248	N89°29'05"W	30.00'
L117	S45°29'47"W	7.07'	L129	S45°29'47"W	7.07'	L141	S45°30'55"W	7.07'	L153	S45°30'55"W	7.07'	L165	S44°29'05"E	7.07'	L177	S44°29'05"E	7.07'	L189	S44°30'13"E	7.07'	L201	S45°29'47"W	7.07'	L213	S45°29'47"W	7.07'	L225	S45°29'47"W	7.07'	L237	S45°30'55"W	7.07'	L249	S45°30'55"W	7.07'
L118	S00°29'47"W	10.00'	L130	S00°29'47"W	10.00'	L142	S00°30'55"W	10.00'	L154	S00°30'55"W	10.00'	L166	S00°30'55"W	10.00'	L178	N00°30'55"E	10.00'	L190	S00°29'47"W	10.00'	L202	S00°29'47"W	10.00'	L214	S00°29'47"W	10.00'	L226	S00°29'47"W	10.00'	L238	S00°30'55"W	10.00'	L250	S00°30'55"W	10.00'
L119	N89°30'13"W	19.00'	L131	S89°30'13"E	19.00'	L143	N89°29'05"W	19.00'	L155	S89°29'05"E	19.00'	L167	S89°29'05"E	19.00'	L179	N89°29'05"W	19.00'	L191	S89°30'13"E	19.00'	L203	N89°30'13"W	19.00'	L215	N89°30'13"W	19.00'	L227	S89°30'13"E	19.00'	L239	N89°29'05"W	19.00'	L251	S89°29'05"E	19.00'
L120	S44°30'13"E	7.07'	L132	S44°30'13"E	7.07'	L144	S44°29'05"E	7.07'	L156	S44°29'05"E	7.07'	L168	S45°30'55"W	7.07'	L180	S45°30'55"W	7.07'	L192	S45°29'47"W	7.07'	L204	S44°30'13"E	7.07'	L216	S44°30'13"E	7.07'	L228	S44°30'13"E	7.07'	L240	S44°29'05"E	7.07'	L252	S44°29'05"E	7.07'
L121	S89°30'13"E	30.00'	L133	S89°30'13"E	30.00'	L145	S89°29'05"E	30.00'	L157	S89°29'05"E	30.00'	L169	N89°29'05"W	30.00'	L181	N89°29'05"W	30.00'	L193	N89°30'13"W	30.00'	L205	S89°30'13"E	30.00'	L217	S89°30'13"E	30.00'	L229	S89°30'13"E	30.00'	L241	S89°29'05"E	30.00'	L253	S89°29'05"E	30.00'
L122	S00°29'47"W	2.00'	L134	S00°29'47"W	2.00'	L146	S00°30'55"W	2.00'	L158	S00°30'55"W	2.00'	L170	S00°30'55"W	2.00'	L182	S00°30'55"W	2.00'	L194	S00°29'47"W	2.00'	L206	S00°29'47"W	2.00'	L218	S00°29'47"W	2.00'	L230	S00°29'47"W	2.00'	L242	S00°30'55"W	2.00'	L254	S00°30'55"W	2.00'
L123	S00°29'47"W	30.00'	L135	S00°29'47"W	30.00'	L147	S00°30'55"W	30.00'	L159	S00°30'55"W	30.00'	L171	S00°30'55"W	30.00'	L183	S00°30'55"W	30.00'	L195	S00°29'47"W	30.00'	L207	S00°29'47"W	30.00'	L219	S00°29'47"W	30.00'	L231	S00°29'47"W	30.00'	L243	S00°30'55"W	30.00'	L255	S00°30'55"W	30.00'
L124	S89°30'13"E	8.00'	L136	S89°30'13"E	8.00'	L148	S89°29'05"E	8.00'	L160	S89°29'05"E	8.00'	L172	N89°29'05"W	8.00'	L184	N89°29'05"W	8.00'	L196	N89°30'13"W	8.00'	L208	S89°30'13"E	8.00'	L220	S89°30'13"E	8.00'	L232	S89°30'13"E	8.00'	L244	S89°29'05"E	8.00'	L256	S89°29'05"E	8.00'

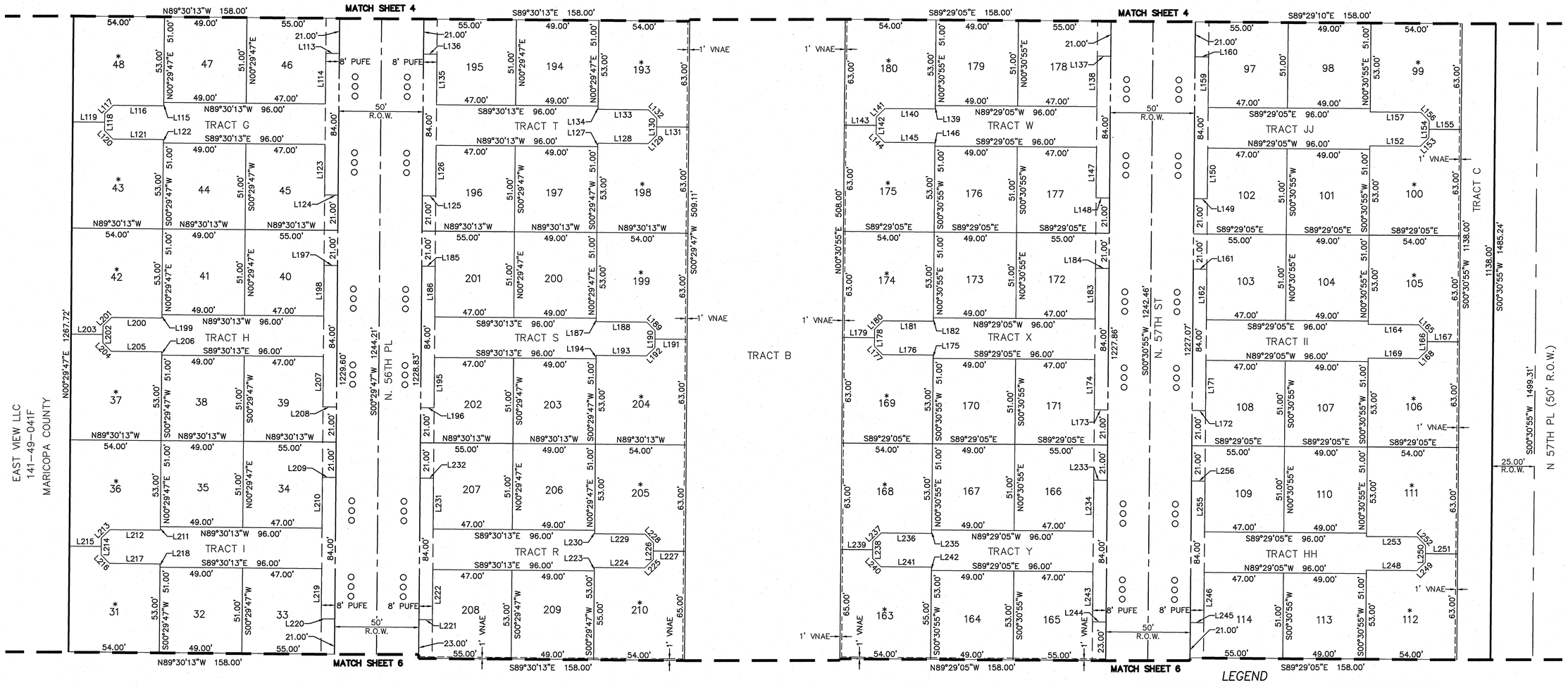

PARCEL TABLE			PARCEL TABLE			PARCEL TABLE			PARCEL TABLE			PARCEL TABLE			PARCEL TABLE			PARCEL TABLE		
TRACT	AREA SQ FT	AREA ACRES	TRACT	AREA SQ FT	AREA ACRES	TRACT	AREA SQ FT	AREA ACRES	TRACT	AREA SQ FT	AREA ACRES	TRACT	AREA SQ FT	AREA ACRES	TRACT	AREA SQ FT	AREA ACRES	TRACT	AREA SQ FT	AREA ACRES
LOT 31	3065	0.070	LOT 42	3065	0.070	LOT 101	2499	0.057	LOT 112	3065	0.070	LOT 171	2565	0.059	LOT 194	2499	0.057	LOT 205	3064	0.070
LOT 32	2499	0.057	LOT 43	3064	0.070	LOT 102	2565	0.059	LOT 113	2499	0.057	LOT 172	2565	0.059	LOT 195	2565	0.059	LOT 206	2499	0.057
LOT 33	2565	0.059	LOT 44	2499	0.057	LOT 103	2565	0.059	LOT 114	2565	0.059	LOT 173	2499	0.057	LOT 196	2565	0.059	LOT 207	2565	0.059
LOT 34	2565	0.059	LOT 45	2565	0.059	LOT 104	2499	0.057	LOT 163	3173	0.073	LOT 174	3064	0.070	LOT 197	2499	0.057	LOT 208	2675	0.061
LOT 35	2499	0.057	LOT 46	2565	0.059	LOT 105	3064	0.070	LOT 164	2597	0.060	LOT 175	3065	0.070	LOT 198	3064	0.070	LOT 209	2597	0.060
LOT 36	3064	0.070	LOT 47	2499	0.057	LOT 106	3065	0.070	LOT 165	2675	0.061	LOT 176	2499	0.057	LOT 199	3064	0.070	LOT 210	3172	0.073
LOT 37	3064	0.070	LOT 48	3065	0.070	LOT 107	2499	0.057	LOT 166	2565	0.059	LOT 177	2565	0.059	LOT 200	2499	0.057			
LOT 38	2499	0.057	LOT 97	2565	0.059	LOT 108	2565	0.059	LOT 167	2499	0.057	LOT 178	2565	0.059	LOT 201	2565	0.059			
LOT 39	2565	0.059	LOT 98	2499	0.057	LOT 109	2565	0.059	LOT 168	3064	0.070	LOT 179	2499	0.057	LOT 202	2565	0.059			
LOT 40	2565	0.059	LOT 99	3064	0.070	LOT 110	2499	0.057	LOT 169	3065	0.070	LOT 180	3064	0.070	LOT 203	2499	0.057			
LOT 41	2499	0.057	LOT 100	3065	0.070	LOT 111	3064	0.070	LOT 170	2499	0.057	LOT 193	3064	0.070	LOT 204	3064	0.070			

LEGEND

- SECTION LINE
- MONUMENT LINE
- RIGHT-OF-WAY LINE
- PROPERTY LINE
- OTHERS PROPERTY LINE
- PROPOSED EASEMENT IN LOTS
- PUBLIC UTILITY EASEMENT
- PROPOSED EASEMENT
- VEHICULAR NON-ACCESS EASEMENT
- SUBDIVISION CORNER, SET REBAR W/CAP, OR AS NOTED
- FOUND MONUMENT AS NOTED
- FOUND BRASS CAP IN HANDHOLE
- PROPOSED BRASS CAP
- TRASH AREA
- EXST. EXISTING
- PUFE PUBLIC UTILITY EASEMENT
- R.O.W. RIGHT OF WAY
- S.V.T. SIGHT VISIBILITY TRIANGLE
- * FIRE SPRINKLER LOT

REGISTERED LAND SURVEYOR CERTIFICATE NO. 31587 EDWIN M. BALLIET Date Signed 10-20-14 ARIZONA, U.S.A. Expires 03/30/2015

ATWELL
866.850.4200 | www.atwell-group.com
MESA, ARIZONA
Land Development & Real Estate
Power & Energy
Telecommunications
Infrastructure & Transportation
Environmental & Solid Waste
Water & Natural Resources

FINAL PLAT

PROJECT: ALBANY VILLAGE
MESA, ARIZONA

COUNTY: MARICOPA
SECTION: 23
TOWNSHIP: 1 NORTH
RANGE: 6 EAST

DATE OCTOBER 2014

REVISIONS

ATWELL

SCALE 0 15 30
1" = 30 FEET
DR. RG | CH. EB
P.M. E. BALLIET
CAD FILE: 13000528 FP.DWG
JOB 13000528
SHEET NO. 5 OF 7

k:\13000528\dwg\survey\final plat\13000528 fp.dwg Savedate:10/22/2014 10:57 AM Plotdate:10/22/2014 11:11 AM

COPYRIGHT © 2014 ATWELL. NO REPRODUCTION SHALL BE MADE WITHOUT THE PRIOR WRITTEN CONSENT OF ATWELL

LINE TABLE			LINE TABLE			LINE TABLE			LINE TABLE			LINE TABLE			LINE TABLE			LINE TABLE			LINE TABLE			LINE TABLE		
LINE #	DIRECTION	LENGTH	LINE #	DIRECTION	LENGTH	LINE #	DIRECTION	LENGTH	LINE #	DIRECTION	LENGTH	LINE #	DIRECTION	LENGTH	LINE #	DIRECTION	LENGTH	LINE #	DIRECTION	LENGTH	LINE #	DIRECTION	LENGTH	LINE #	DIRECTION	LENGTH
L257	N89°30'13"W	8.00'	L268	S89°30'13"E	8.00'	L279	S00°30'55"W	30.00'	L290	S00°30'55"W	2.00'	L301	S89°30'13"E	30.00'	L312	S44°30'13"E	7.07'	L323	S89°30'13"E	19.00'	L334	S00°30'55"W	10.00'	L345	S44°29'05"E	7.07'
L258	S00°29'47"W	30.00'	L269	S89°29'05"E	8.00'	L280	N89°29'05"W	8.00'	L291	S00°30'55"W	30.00'	L302	S00°29'47"W	2.00'	L313	S89°30'13"E	30.00'	L324	S44°30'13"E	7.07'	L335	N89°29'05"W	19.00'	L346	S00°30'55"W	10.00'
L259	S00°29'47"W	2.00'	L270	S00°30'55"W	30.00'	L281	S89°29'05"E	8.00'	L292	N89°29'05"W	8.00'	L303	S00°29'47"W	30.00'	L314	S00°29'47"W	2.00'	L325	S89°30'13"E	30.00'	L336	S44°29'05"E	7.07'	L347	S89°29'05"E	19.00'
L260	N89°30'13"W	30.00'	L271	S00°30'55"W	2.00'	L282	S00°30'55"W	30.00'	L293	N89°30'13"W	8.00'	L304	S89°30'13"E	8.00'	L315	S00°29'47"W	30.00'	L326	S00°29'47"W	2.00'	L337	S89°29'05"E	30.00'	L348	S45°30'55"W	7.07'
L261	S45°29'47"W	7.07'	L272	S89°29'05"E	30.00'	L283	N00°30'55"E	2.00'	L294	S00°29'47"W	30.00'	L305	N89°30'13"W	8.00'	L316	S89°30'13"E	8.00'	L327	S00°29'47"W	30.00'	L338	S00°30'55"W	2.00'	L349	N89°29'05"W	30.00'
L262	S00°29'47"W	10.00'	L273	S44°29'05"E	7.07'	L284	S89°29'05"E	30.00'	L295	S00°29'47"W	2.00'	L306	S00°29'47"W	30.00'	L317	N89°30'13"W	8.00'	L328	S89°30'13"E	8.00'	L339	S00°30'55"W	30.00'	L350	S00°30'55"W	2.00'
L263	N89°30'13"W	19.00'	L274	S00°30'55"W	10.00'	L285	S44°29'05"E	7.07'	L296	N89°30'13"W	30.00'	L307	S00°29'47"W	2.00'	L318	S00°29'47"W	30.00'	L329	N89°29'05"W	8.00'	L340	S89°29'05"E	8.00'	L351	S00°30'55"W	30.00'
L264	S44°30'13"E	7.07'	L275	S89°29'05"E	19.00'	L286	S00°30'55"W	10.00'	L297	S45°29'47"W	7.07'	L308	N89°30'13"W	30.00'	L319	S00°29'47"W	2.00'	L330	S00°30'55"W	30.00'	L341	S89°29'05"E	8.00'	L352	N89°29'05"W	8.00'
L265	S89°30'13"E	30.00'	L276	S45°30'55"W	7.07'	L287	S89°29'05"E	19.00'	L298	S00°29'47"W	10.00'	L309	S45°29'47"W	7.07'	L320	N89°30'13"W	30.00'	L331	S00°30'55"W	2.00'	L342	S00°30'55"W	30.00'			
L266	S00°29'47"W	2.00'	L277	N89°29'05"W	30.00'	L288	S45°30'55"W	7.07'	L299	N89°30'13"W	19.00'	L310	S00°29'47"W	10.00'	L321	S45°29'47"W	7.07'	L332	N89°29'05"W	30.00'	L343	S00°30'55"W	2.00'			
L267	S00°29'47"W	30.00'	L278	S00°30'55"W	2.00'	L289	N89°29'05"W	30.00'	L300	S44°30'13"E	7.07'	L311	N89°30'13"W	19.00'	L322	S00°29'47"W	10.00'	L333	S45°30'55"W	7.07'	L344	S89°29'05"E	30.00'			

LEGEND

- SECTION LINE
- MONUMENT LINE
- RIGHT-OF-WAY LINE
- PROPERTY LINE
- OTHERS PROPERTY LINE
- PROPOSED EASEMENT IN LOTS
- PUBLIC UTILITY EASEMENT
- PROPOSED EASEMENT
- VEHICULAR NON-ACCESS EASEMENT
- SUBDIVISION CORNER, SET REBAR W/CAP, OR AS NOTED
- FOUND MONUMENT AS NOTED
- FOUND BRASS CAP IN HANDHOLE
- PROPOSED BRASS CAP
- TRASH AREA
- EXST. EXISTING
- PUFE PUBLIC UTILITY EASEMENT
- R.O.W. RIGHT OF WAY
- S.V.T. SIGHT VISIBILITY TRIANGLE
- * FIRE SPRINKLER LOT

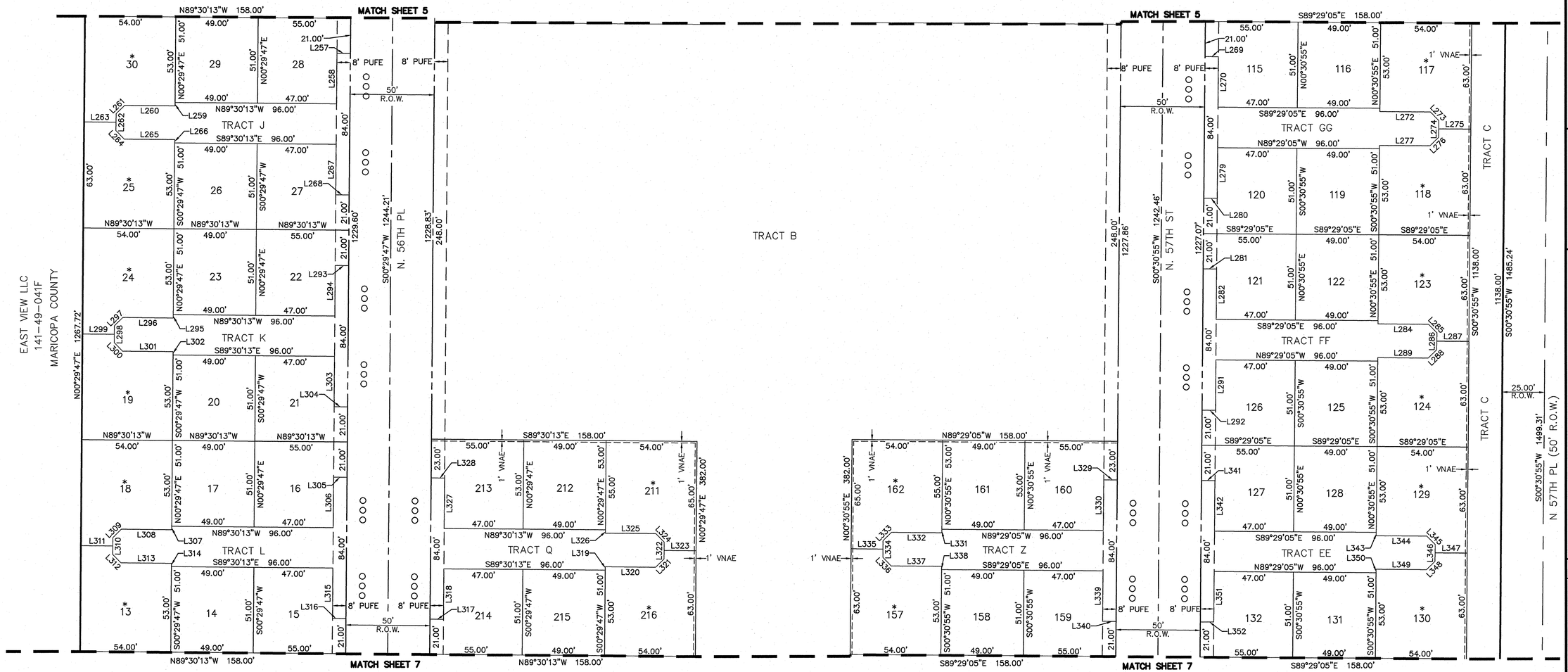

PARCEL TABLE			PARCEL TABLE			PARCEL TABLE			PARCEL TABLE			PARCEL TABLE		
TRACT	AREA SQ FT	AREA ACRES	TRACT	AREA SQ FT	AREA ACRES	TRACT	AREA SQ FT	AREA ACRES	TRACT	AREA SQ FT	AREA ACRES	TRACT	AREA SQ FT	AREA ACRES
LOT 13	3064	0.070	LOT 23	2499	0.057	LOT 117	3064	0.070	LOT 127	2565	0.059	LOT 161	2597	0.060
LOT 14	2499	0.057	LOT 24	3064	0.070	LOT 118	3065	0.070	LOT 128	2499	0.057	LOT 162	3172	0.073
LOT 15	2565	0.059	LOT 25	3064	0.070	LOT 119	2499	0.057	LOT 129	3064	0.070	LOT 211	3172	0.073
LOT 16	2565	0.059	LOT 26	2499	0.057	LOT 120	2565	0.059	LOT 130	3065	0.070	LOT 212	2597	0.060
LOT 17	2499	0.057	LOT 27	2565	0.059	LOT 121	2565	0.059	LOT 131	2499	0.057	LOT 213	2675	0.061
LOT 18	3064	0.070	LOT 28	2565	0.059	LOT 122	2499	0.057	LOT 132	2565	0.059	LOT 214	2565	0.059
LOT 19	3064	0.070	LOT 29	2499	0.057	LOT 123	3064	0.070	LOT 157	3064	0.070	LOT 215	2499	0.057
LOT 20	2499	0.057	LOT 30	3064	0.070	LOT 124	3065	0.070	LOT 158	2499	0.057	LOT 216	3064	0.070
LOT 21	2565	0.059	LOT 115	2565	0.059	LOT 125	2499	0.057	LOT 159	2565	0.059			
LOT 22	2565	0.059	LOT 116	2499	0.057	LOT 126	2565	0.059	LOT 160	2675	0.061			

REGISTERED LAND SURVEYOR
CERTIFICATE NO.
31587
EDWIN M.
BALLIET
Date Signed 10-22-14
ARIZONA, U.S.A.
Expires 09/30/2015

Land Development & Real Estate
Power & Energy
Telecommunications
Infrastructure & Transportation
Environmental & Solid Waste
Water & Natural Resources

ATWELL
866.850.4200 | www.atwell-group.com
MESA, ARIZONA

COUNTY: MARICOPA
SECTION: 23
TOWNSHIP: 1 NORTH
RANGE: 6 EAST

FINAL PLAT

PROJECT:

ALBANY VILLAGE

MESA, ARIZONA

DATE OCTOBER 2014

REVISIONS

ATWELL

SCALE 0 15 30
1" = 30 FEET

DR. RG | CH. EB
P.M. E. BALLIET
CAD FILE: 13000528 FP.DWG
JOB 13000528
SHEET NO. 6 OF 7

k:\13000528\dwg\survey\final plat\13000528 fp.dwg Savedate:10/22/2014 10:57 AM Plotdate:10/22/2014 11:11 AM

COPYRIGHT © 2014 ATWELL. NO REPRODUCTION SHALL BE MADE WITHOUT THE PRIOR WRITTEN CONSENT OF ATWELL

LINE TABLE			LINE TABLE			LINE TABLE			LINE TABLE			LINE TABLE			LINE TABLE			LINE TABLE			LINE TABLE			LINE TABLE		
LINE #	DIRECTION	LENGTH	LINE #	DIRECTION	LENGTH	LINE #	DIRECTION	LENGTH	LINE #	DIRECTION	LENGTH	LINE #	DIRECTION	LENGTH	LINE #	DIRECTION	LENGTH	LINE #	DIRECTION	LENGTH	LINE #	DIRECTION	LENGTH	LINE #	DIRECTION	LENGTH
L353	S89°29'05"E	8.00'	L364	N89°29'05"W	8.00'	L375	S00°30'55"W	30.00'	L386	S00°29'47"W	2.00'	L397	N89°30'13"W	30.00'	L408	S44°30'13"E	7.07'	L419	S89°30'13"E	19.00'	L430	S00°30'55"W	10.00'	L441	S45°30'55"W	7.07'
L354	S00°30'55"W	30.00'	L365	S89°29'05"E	8.00'	L376	N89°29'05"W	8.00'	L387	S00°29'47"W	30.00'	L398	S00°29'47"W	2.00'	L409	S89°30'13"E	30.00'	L420	S44°30'13"E	7.07'	L431	N89°29'05"W	19.00'	L442	S00°30'55"W	10.00'
L355	N00°30'55"E	2.00'	L366	S00°30'55"W	30.00'	L377	S89°30'13"E	8.00'	L388	N89°30'13"W	8.00'	L399	S00°29'47"W	30.00'	L410	N00°29'47"E	2.00'	L421	S89°30'13"E	30.00'	L432	S44°29'05"E	7.07'	L443	S89°29'05"E	19.00'
L356	S89°29'05"E	30.00'	L367	S00°30'55"W	2.00'	L378	S00°29'47"W	30.00'	L389	S89°30'13"E	8.00'	L400	N89°30'13"W	8.00'	L411	S00°29'47"W	30.00'	L422	S00°29'47"W	2.00'	L433	S89°29'05"E	30.00'	L444	S44°29'05"E	7.07'
L357	S44°29'05"E	7.07'	L368	S89°29'05"E	30.00'	L379	S00°29'47"W	2.00'	L390	S00°29'47"W	30.00'	L401	N89°30'13"W	8.00'	L412	S89°30'13"E	8.00'	L423	S00°29'47"W	30.00'	L434	S00°30'55"W	2.00'	L445	S89°29'05"E	30.00'
L358	S00°30'55"W	10.00'	L369	S44°29'05"E	7.07'	L380	S89°30'13"E	30.00'	L391	S00°29'47"W	2.00'	L402	S00°29'47"W	30.00'	L413	N89°30'13"W	8.00'	L424	S89°30'13"E	8.00'	L435	S00°30'55"W	30.00'	L446	S00°30'55"W	2.00'
L359	S89°29'05"E	19.00'	L370	S00°30'55"W	10.00'	L381	S44°30'13"E	7.07'	L392	S89°30'13"E	30.00'	L403	S00°29'47"W	2.00'	L414	S00°29'47"W	30.00'	L425	N89°29'05"W	8.00'	L436	S89°29'05"E	8.00'	L447	S00°30'55"W	30.00'
L360	S45°30'55"W	7.07'	L371	N89°29'05"W	19.00'	L382	S00°29'47"W	10.00'	L393	S44°30'13"E	7.07'	L404	N89°30'13"W	30.00'	L415	N00°29'47"E	2.00'	L426	S00°30'55"W	30.00'	L437	N89°29'05"W	8.00'	L448	S89°29'05"E	8.00'
L361	N89°29'05"W	30.00'	L372	S45°30'55"W	7.07'	L383	S89°30'13"E	19.00'	L394	S00°29'47"W	10.00'	L405	S45°29'47"W	7.07'	L416	S89°30'13"E	30.00'	L427	S00°30'55"W	2.00'	L438	S00°30'55"W	30.00'			
L362	S00°30'55"W	2.00'	L373	N89°29'05"W	30.00'	L384	S45°29'47"W	7.07'	L395	N89°30'13"W	19.00'	L406	S00°29'47"W	10.00'	L417	S45°29'47"W	7.07'	L428	S89°29'05"E	30.00'	L439	S00°30'55"W	2.00'			
L363	S00°30'55"W	30.00'	L374	S00°30'55"W	2.00'	L385	N89°30'13"W	30.00'	L396	S45°29'47"W	7.07'	L407	N89°30'13"W	19.00'	L418	S00°29'47"W	10.00'	L429	S45°30'55"W	7.07'	L440	N89°29'05"W	30.00'			

LEGEND

	SECTION LINE
	MONUMENT LINE
	RIGHT-OF-WAY LINE
	PROPERTY LINE
	OTHERS PROPERTY LINE
	PROPOSED EASEMENT IN LOTS
	PUBLIC UTILITY EASEMENT
	PROPOSED EASEMENT
	VEHICULAR NON-ACCESS EASEMENT
	SUBDIVISION CORNER, SET REBAR W/CAP, OR AS NOTED
	FOUND MONUMENT AS NOTED
	FOUND BRASS CAP IN HANDHOLE
	PROPOSED BRASS CAP
	TRASH AREA
EXST.	EXISTING
PUFE	PUBLIC UTILITY EASEMENT
R.O.W.	RIGHT OF WAY
S.V.T.	SIGHT VISIBILITY TRIANGLE
*	FIRE SPRINKLER LOT

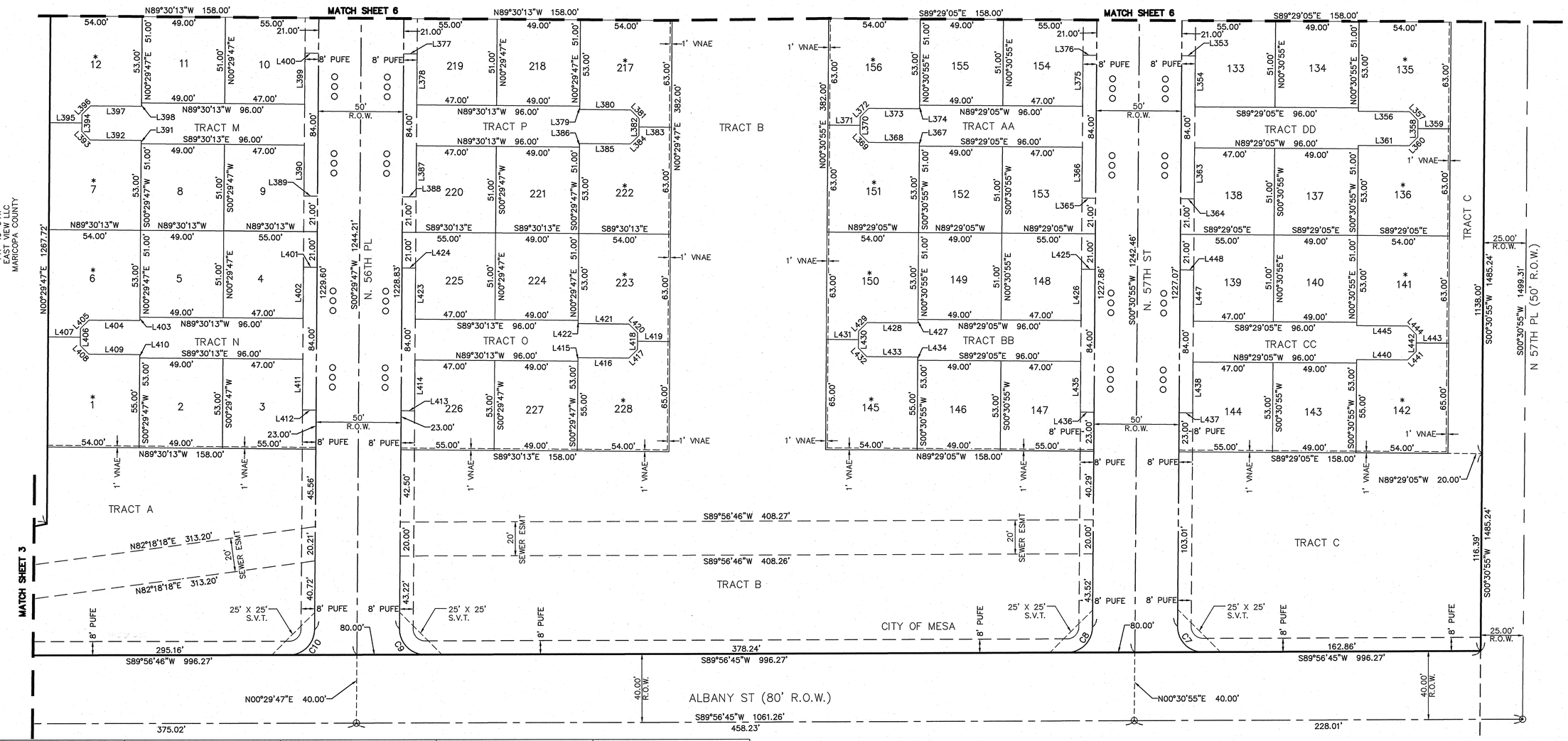

PARCEL TABLE			PARCEL TABLE			PARCEL TABLE			PARCEL TABLE			PARCEL TABLE		
TRACT	AREA SQ FT	AREA ACRES	TRACT	AREA SQ FT	AREA ACRES	TRACT	AREA SQ FT	AREA ACRES	TRACT	AREA SQ FT	AREA ACRES	TRACT	AREA SQ FT	AREA ACRES
LOT 1	3173	0.073	LOT 11	2499	0.057	LOT 141	3064	0.070	LOT 151	3064	0.070	LOT 221	2499	0.057
LOT 2	2597	0.060	LOT 12	3064	0.070	LOT 142	3173	0.073	LOT 152	2499	0.057	LOT 222	3064	0.070
LOT 3	2675	0.061	LOT 133	2565	0.059	LOT 143	2597	0.060	LOT 153	2565	0.059	LOT 223	3064	0.070
LOT 4	2565	0.059	LOT 134	2499	0.057	LOT 144	2675	0.061	LOT 154	2565	0.059	LOT 224	2499	0.057
LOT 5	2499	0.057	LOT 135	3064	0.070	LOT 145	3172	0.073	LOT 155	2499	0.057	LOT 225	2565	0.059
LOT 6	3065	0.070	LOT 136	3065	0.070	LOT 146	2597	0.060	LOT 156	3064	0.070	LOT 226	2675	0.061
LOT 7	3064	0.070	LOT 137	2499	0.057	LOT 147	2675	0.061	LOT 217	3064	0.070	LOT 227	2597	0.060
LOT 8	2499	0.057	LOT 138	2565	0.059	LOT 148	2565	0.059	LOT 218	2499	0.057	LOT 228	3172	0.073
LOT 9	2565	0.059	LOT 139	2565	0.059	LOT 149	2499	0.057	LOT 219	2565	0.059			
LOT 10	2565	0.059	LOT 140	2499	0.057	LOT 150	3065	0.070	LOT 220	2565	0.059			

CURVE TABLE				
CURVE #	LENGTH	RADIUS	DELTA	CHORD
C7	23.71'	15.00'	090°34'09"	S44°46'09"E 21.32'
C8	23.41'	15.00'	089°25'51"	N45°13'51"E 21.11'
C9	23.71'	15.00'	090°33'01"	S44°46'43"E 21.31'
C10	23.42'	15.00'	089°26'59"	N45°13'17"E 21.11'

REGISTERED LAND SURVEYOR
CERTIFICATE NO.
31587
EDWIN M. BALLIET
Date Signed 10-22-14
ARIZONA, U.S.A.
Expires 09/30/2015

Land Development & Real Estate
Power & Energy
Telecommunications
Infrastructure & Transportation
Environmental & Solid Waste
Water & Natural Resources

ATWELL
866.850.4200 | www.atwell-group.com
MESA, ARIZONA

COUNTY: MARICOPA
SECTION: 23
TOWNSHIP: 1 NORTH
RANGE: 6 EAST

FINAL PLAT

PROJECT:

ALBANY VILLAGE

MESA, ARIZONA

DATE
OCTOBER 2014

REVISIONS

ATWELL

SCALE 0 15 30
1" = 30 FEET

DR. RG | CH. EB
P.M. E. BALLIET
CAD FILE: 13000528 FP.DWG
JOB 13000528
SHEET NO.
7 OF 7

k:\13000528\dwg\survey\final plat\13000528 fp.dwg Savedate:10/22/2014 10:57 AM Plotdate:10/22/2014 11:11 AM